Analysis and Optimization of Simulink Models

Bentley James Oakes

McGill University

bentley.oakes@mail.mcgill.ca

May 21, 2015

Problem Statement

- The Simulink modelling tool is used to diagram and study cyber-physical systems, and to generate embeddable code directly from the models.
- Therefore, optimization of this model (and resulting code) is important for simulation/executing performance

Current Simulink Optimization Issues:

- May occur during code generation
- Not explicit
- Lack of traceability/verification

Solution

- Defining explicit analyses on Simulink models
  - Data-flow/range analyses, block nesting
- Implementing model transformations to optimize the model based on these analyses
  - Explicit transformations can be debugged/traced/verified
  - Produces model for further verification/development

Examples

Constant Folding

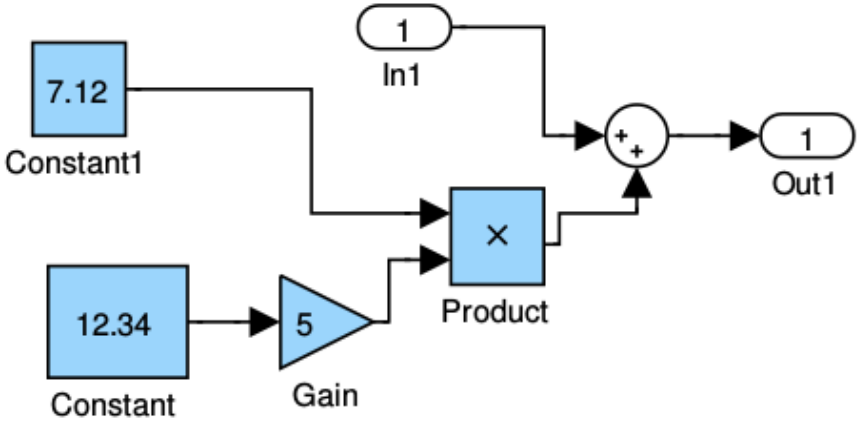

Model before

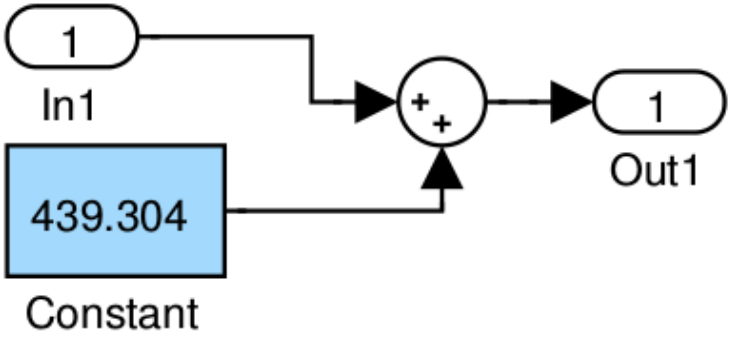

Model after

Dead-Block Removal

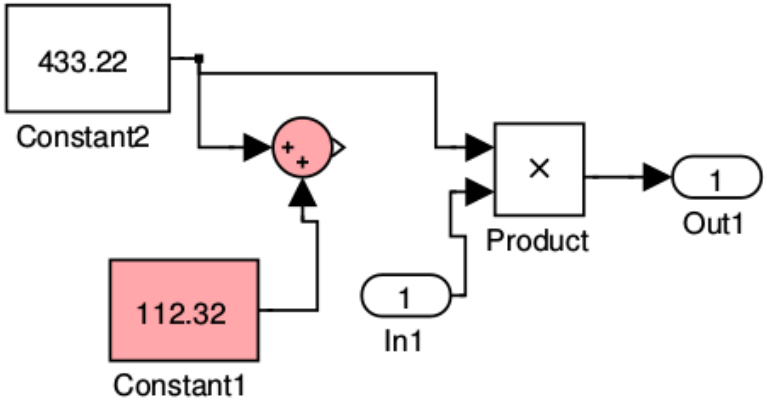

Model before

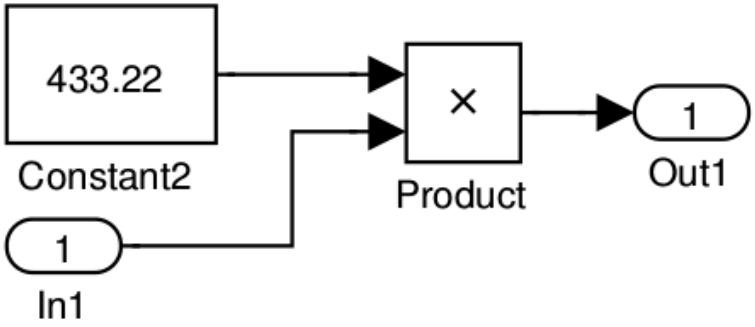

Model after

Conclusion

- Material presented is found in:
- Oakes, B. J. (2014). Optimizing Simulink Models. Technical Report SOCS-TR-2014.5, McGill University.

Future work:

- Expand analyses to consider user assumptions, numerical precision issues
- Implement tool to perform dynamic analysis of Simulink models
- Formally verify each model transformation